B2RKB2457P

Symmetrical Linear Inground Light

1.Exterior details

1.1 Luminaire

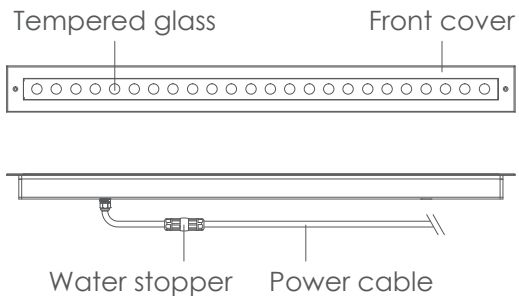

1.2 Dimension (mm)

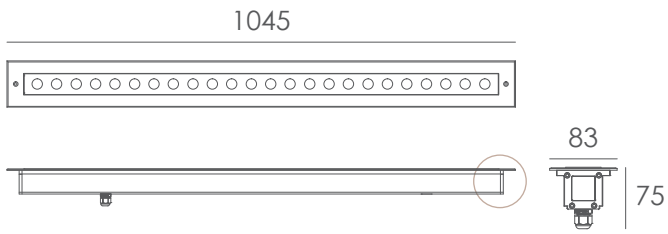

1.3 Recessed sleeve (144#)

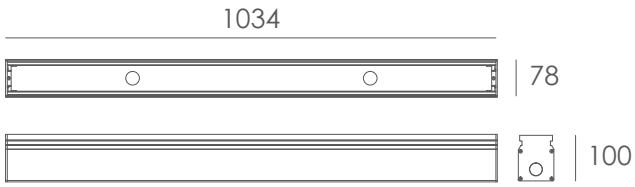

2.Datasheet

Housing:	Extruded aluminum, powder coated
Front Cover:	Hard chrome-plated stainless steel SUS 316L#
Light Window:	Tempered step glass.T=6mm
Lens:	OPTICS lens.efficiency≥85%
Cable Gland:	IP68 PG-9 PA66
Gasket:	Glass and housing are silicone sealed
Glass Pressure Capacity:	5,207kgs
Operating Temperature:	-20˚C~40˚C
Power Cable:	H05RN-F 2×1.0mm², L=0.5m
Recessed Sleeve Material:	Powder Coated Aluminum

Light Source:	24×2W
Beam Angle:	20°
Input Voltage(v):	DC 24
Operating Current(mA):	2500
Consumption(w):	60
Luminance(lm):	4924
IK:	08

3.Installation steps

Step 1

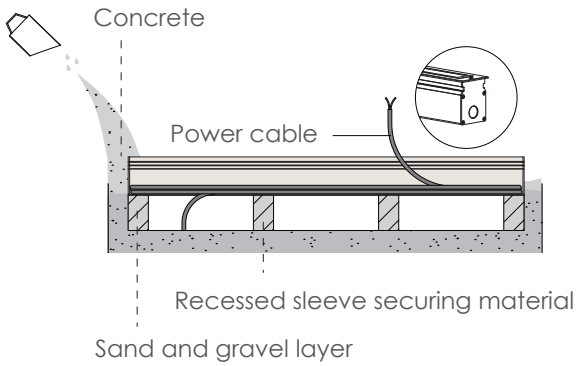

Step 2

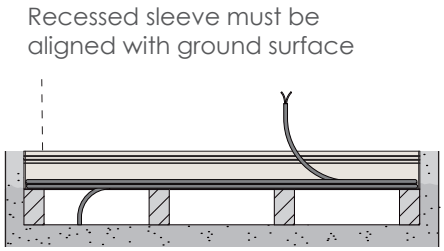

Step 3

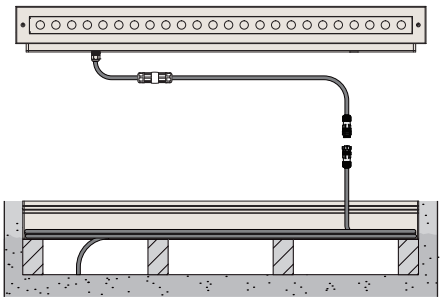

Connect the power cable

Step 4

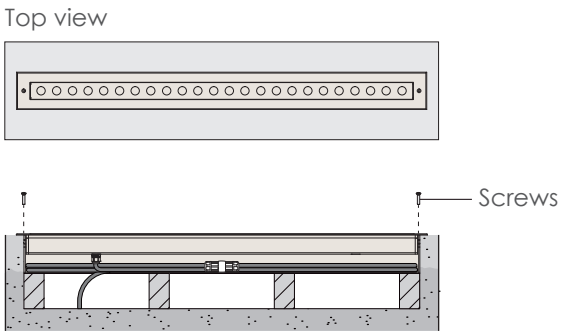

Kapego company limited

TEL:+86 076983997830
FAX:+86 076983997833
Email:sales@kapego.com
Website:www.kapego.com
East changle Road,Yuning industrial district.
Hengli, Dongguang, guangdong, China 523478

IP67